Project 5: 32-Bit ALU

By: Vy Tang

Abstract

This personal project serves to build a functional 32-bit ALU using CMOS topology. Through this project, I was able to create 2:1 multiplexers, 4:1 multiplexers, 1-bit ALU, 4-bit ALU and a 32-bit ALU by cascading 8 4-bit ALU in series. A full functional DRC/LVS check was performed, and results showed no error in the layouts. Additionally, a testbench was built to confirm ALU's operation via transient response analysis yielded that the ALU was able to conduct 'AND' 'XOR', 'OR', and full adder operations successfully.

Theory

An Arithmetic Logic Unit (ALU) is used generally in CPUs to perform any mathematical computation and logical functions. The ALU takes data from two data inputs 'A' and 'B' and receives a specific opcode 'S0' and 'S1' from the control unit on what type of calculations they are going to execute. Depending on the configuration, the ALU will generally perform "AND", "OR", "NOT", "XOR" and many more. However, for this purpose this ALU will perform "AND", "OR" "XOR", and full adder operations that include subtraction and addition. The truth table for the configured 1-bit ALU is shown below

S0	S1	Operation	Y
0	0	AND	$Y = A * B$
0	1	XOR	$Y = A \oplus B$
1	0	OR	$Y = A + B$
1	1	Full-Adder	$Y = A \oplus B \oplus C$

Components

2:1 MUX schematic

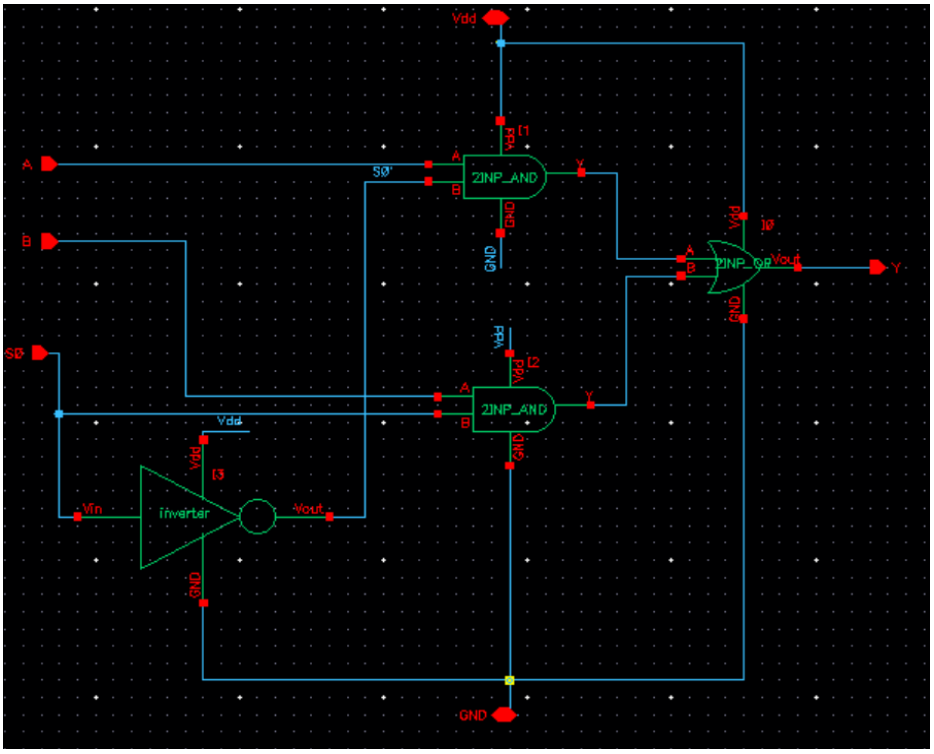

Layout

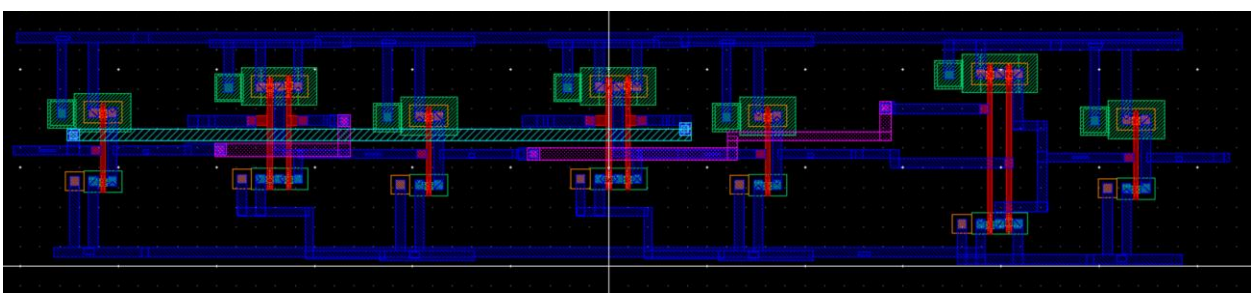

2:1 MUX DRC test

Virtuoso® 6.1.8-64b - Log: /users/ugrad/vttang/CDS.log@crystalcove.eecs.uci.edu

File Tools Options Help

```
executing: drc(metalcapCapEdge via3Edge (sep < (lambda * 5.0)) errMesg)
executing: saveDerived(geomAnd(metalcap via3) errMesg)
executing: drc(metalcapBottomEdge via4Edge (enc < (lambda * 5.0)) errMesg)
executing: drc(metalcapBottomEdge via3Edge (enc < (lambda * 5.0)) errMesg)
DRC started.......Sat Apr 25 14:50:06 2026
    completed ....Sat Apr 25 14:50:06 2026
    CPU TIME = 00:00:00  TOTAL TIME = 00:00:00
*********   Summary of rule violations for cell "2:1_MUX layout"   *********
   Total errors found: 0
```

2:1 MUX LVS Check

/users/ugrad/vttang/EECS170D/Cadence6/LVS/si.out@crystalcove.eecs.uci.edu

File Edit View Help

```
Devices in the rules but not in the netlist:
        cap nfet pfet nmos4 pmos4

The net-lists match.

                              layout  schematic
                                 instances
        un-matched               0       0
        rewired                  0       0
        size errors              0       0
        pruned                   0       0
        active                   20      20
        total                    20      20

                                   nets
        un-matched               0       0
        merged                   0       0
        pruned                   0       0
        active                   15      15
        total                    15      15

                                 terminals
        un-matched               0       0
        matched but
        different type           0       0
        total                    0       6


Probe files from /users/ugrad/vttang/EECS170D/Cadence6/LVS/schematic

devbad.out:

netbad.out:

mergenet.out:

termbad.out:

prunenet.out:

prunedev.out:

audit.out:
```

4:1 MUX schematic

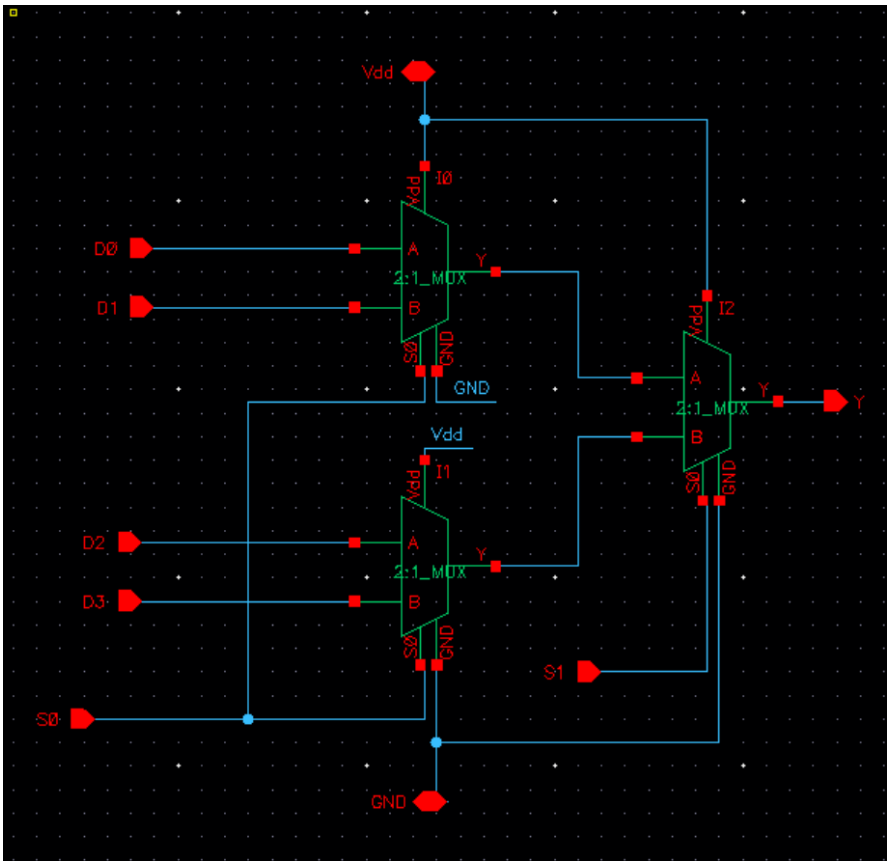

Layout

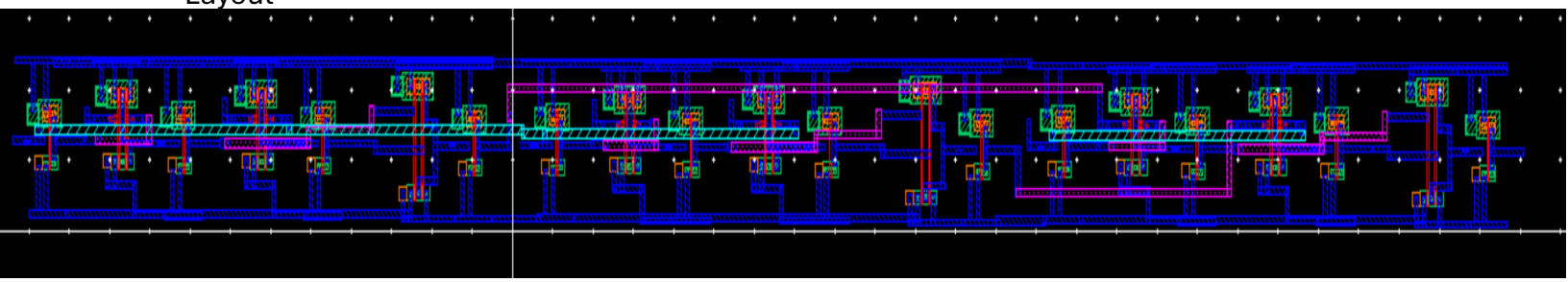

4:1 MUX DRC test

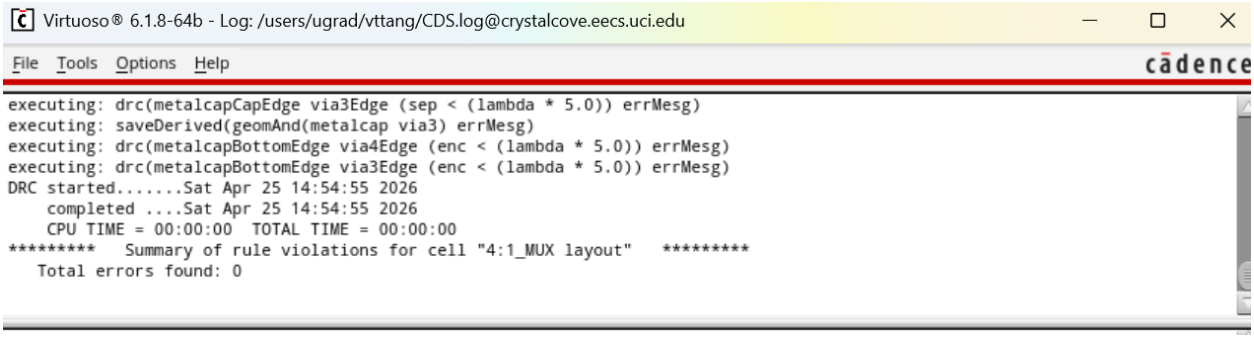

Virtuoso® 6.1.8-64b - Log: /users/ugrad/vttang/CDS.log@crystalcove.eecs.uci.edu

File Tools Options Help cādence

```
executing: drc(metalcapCapEdge via3Edge (sep < (lambda * 5.0)) errMesg)
executing: saveDerived(geomAnd(metalcap via3) errMesg)
executing: drc(metalcapBottomEdge via4Edge (enc < (lambda * 5.0)) errMesg)
executing: drc(metalcapBottomEdge via3Edge (enc < (lambda * 5.0)) errMesg)
DRC started.......Sat Apr 25 14:54:55 2026
    completed ....Sat Apr 25 14:54:55 2026
    CPU TIME = 00:00:00  TOTAL TIME = 00:00:00
*********   Summary of rule violations for cell "4:1_MUX layout"   *********
   Total errors found: 0
```

4:1 MUX LVS check

/users/ugrad/vttang/EECS170D/Cadence6/LVS/si.out@crystalcove.eecs.uci.edu

File Edit View Help

```
The net-lists match.

                              layout  schematic
                                 instances
        un-matched               0       0
        rewired                  0       0
        size errors              0       0
        pruned                   0       0
        active                   60      60
        total                    60      60

                                   nets
        un-matched               0       0
        merged                   0       0
        pruned                   0       0
        active                   38      38
        total                    38      38

                                 terminals
        un-matched               0       0
        matched but
        different type           0       0
        total                    0       9


Probe files from /users/ugrad/vttang/EECS170D/Cadence6/LVS/schematic

devbad.out:

netbad.out:

mergenet.out:

termbad.out:

prunenet.out:

prunedev.out:

audit.out:


Probe files from /users/ugrad/vttang/EECS170D/Cadence6/LVS/layout
```

1-bit ALU schematic

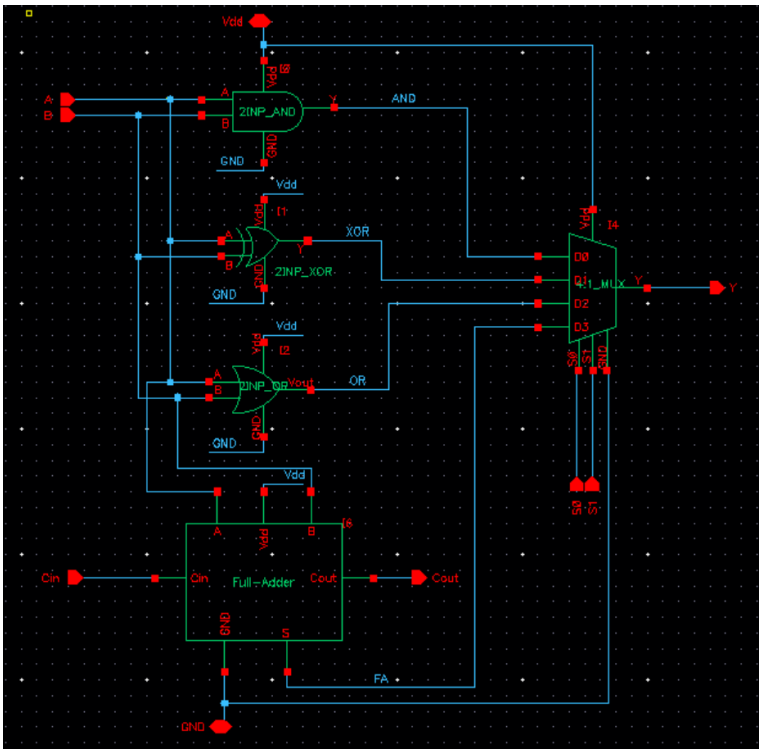

1-bit ALU layout

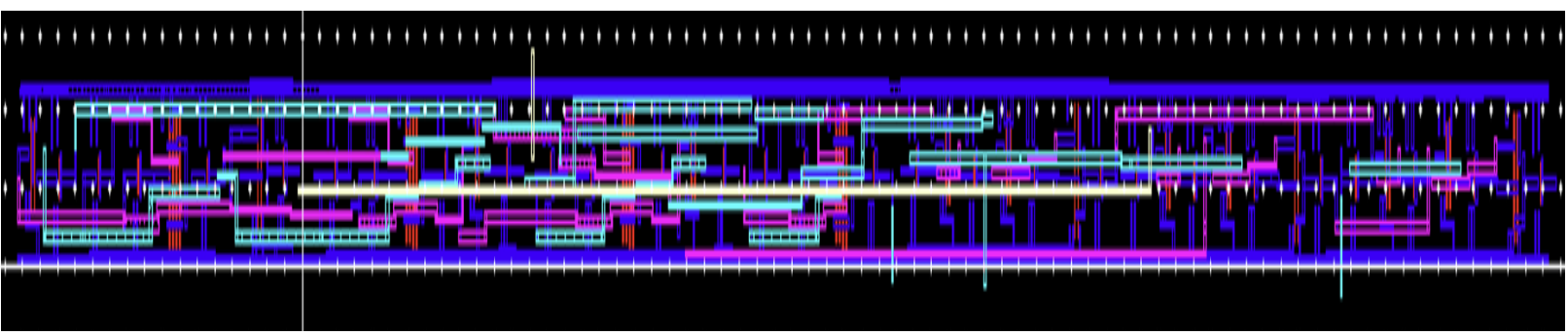

1-bit ALU DRC

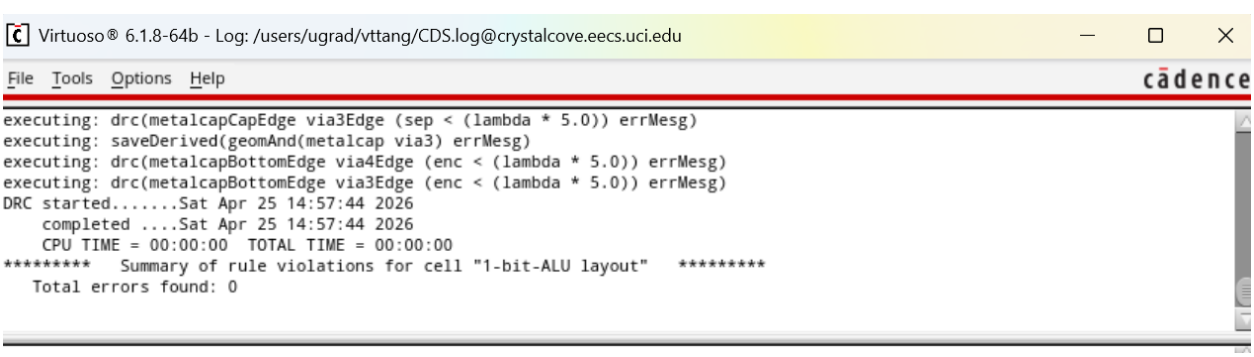

Virtuoso® 6.1.8-64b - Log: /users/ugrad/vttang/CDS.log@crystalcove.eecs.uci.edu

File Tools Options Help cādence

```
executing: drc(metalcapCapEdge via3Edge (sep < (lambda * 5.0)) errMesg)
executing: saveDerived(geomAnd(metalcap via3) errMesg)
executing: drc(metalcapBottomEdge via4Edge (enc < (lambda * 5.0)) errMesg)
executing: drc(metalcapBottomEdge via3Edge (enc < (lambda * 5.0)) errMesg)
DRC started.......Sat Apr 25 14:57:44 2026
    completed ....Sat Apr 25 14:57:44 2026
    CPU TIME = 00:00:00  TOTAL TIME = 00:00:00
*********   Summary of rule violations for cell "1-bit-ALU layout"   *********
   Total errors found: 0
```

1-bit ALU LVS check

```
@(#)$CDS: LVS version 6.1.8-64b 09/22/2020 18:59 (sjfhw316) $

Command line: /ecelib/eceware/cadence/ic618/tools.lnx86/dfII/bin/64bit/LVS -dir /users/ugrad/vttang/EECS170D/Cadence6/LVS -l -s -t /
Like matching is enabled.
Net swapping is enabled.
Using terminal names as correspondence points.
Compiling Diva LVS rules...

    Net-list summary for /users/ugrad/vttang/EECS170D/Cadence6/LVS/layout/netlist
       count
        77              nets
        0               terminals
        70              pmos
        70              nmos

    Net-list summary for /users/ugrad/vttang/EECS170D/Cadence6/LVS/schematic/netlist
       count
        77              nets
        9               terminals
        70              pmos
        70              nmos

Devices in the rules but not in the netlist:
        cap nfet pfet nmos4 pmos4

1 net-list ambiguity was resolved by random selection.

The net-lists match.

                              layout  schematic
                                instances
        un-matched              0       0
        rewired                 0       0
        size errors             0       0
        pruned                  0       0
        active                  140     140
        total                   140     140

                                  nets
        un-matched              0       0
        merged                  0       0
        pruned                  0       0
        active                  77      77
        total                   77      77
```

1-bit ALU testbench

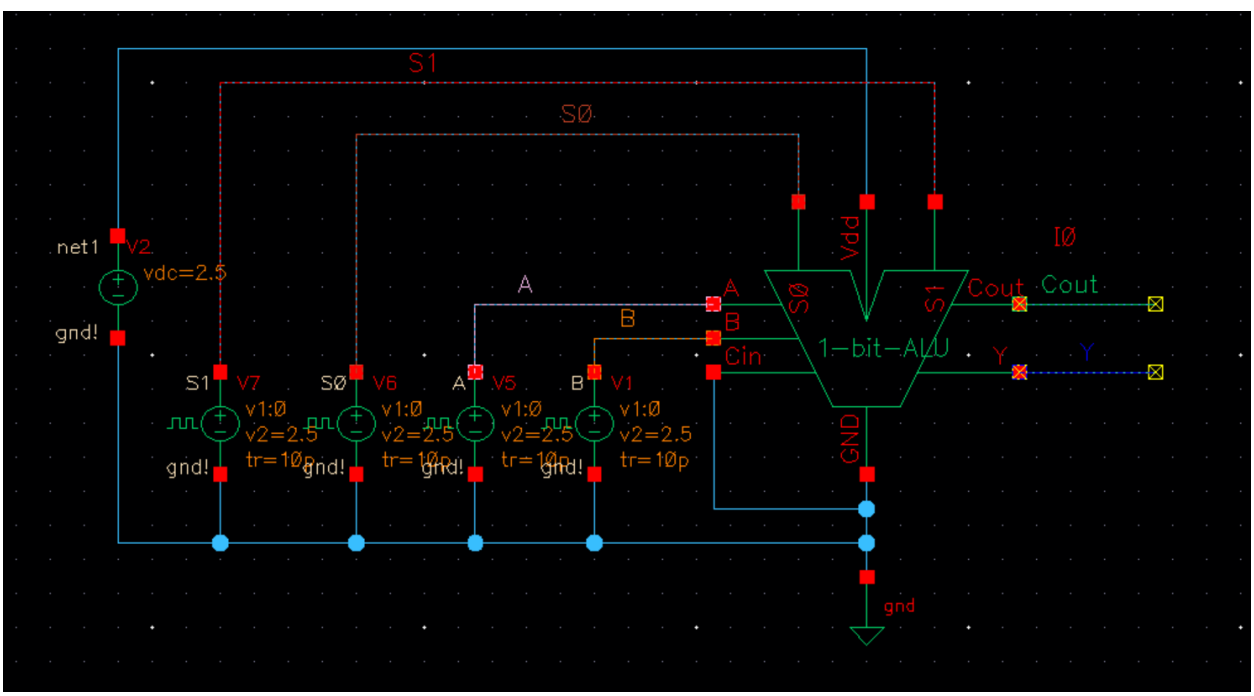

Verifying 1-bit-ALU operation

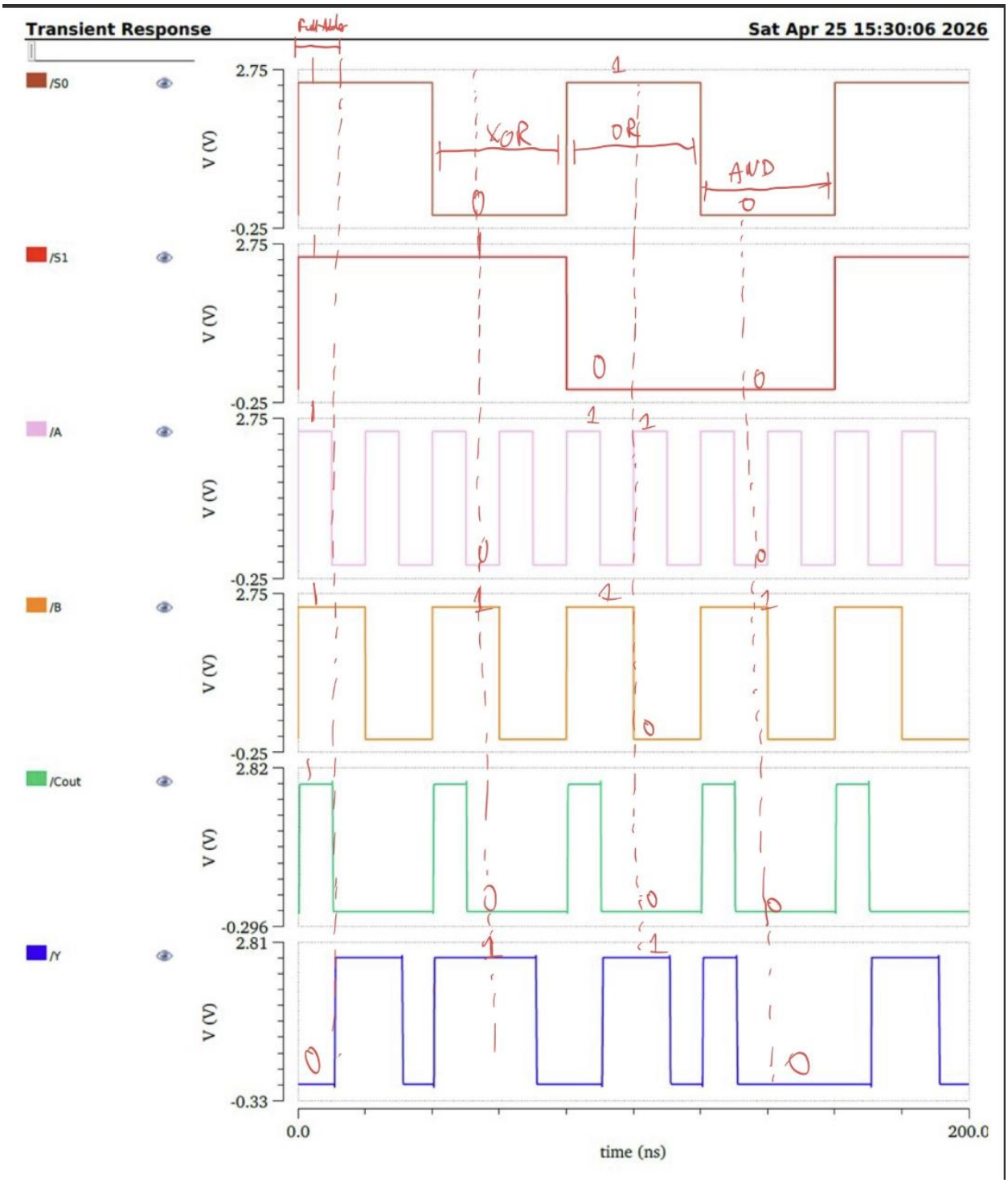

As can be seen from the transient response, the 1-bit ALU performs as expected at different clock cycles with different op codes. At the beginning when inputs of S0 and S1 were

both 1, inputs A and B were also one and thus carry out (Cout) was 1 and the output Y would be 0. Similarly, if we look at the waveform for XOR, OR, and, AND calculations, we see that at each input, the ALU correctly performs the computation.

4-bit ALU schematic

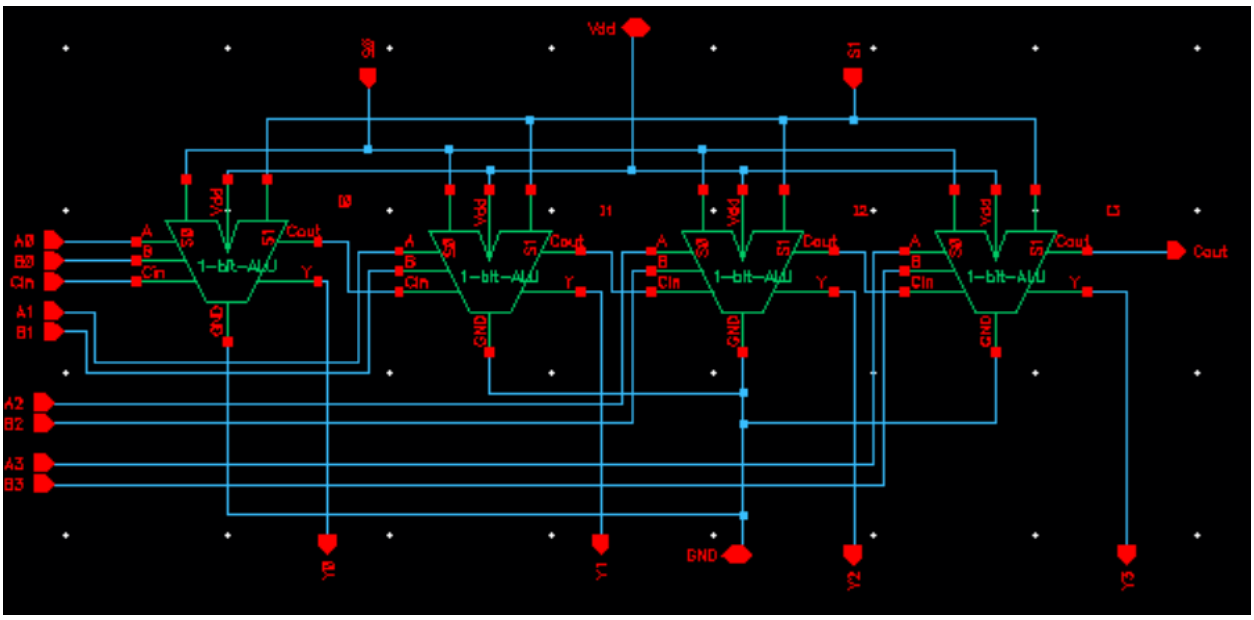

4-bit ALU layout

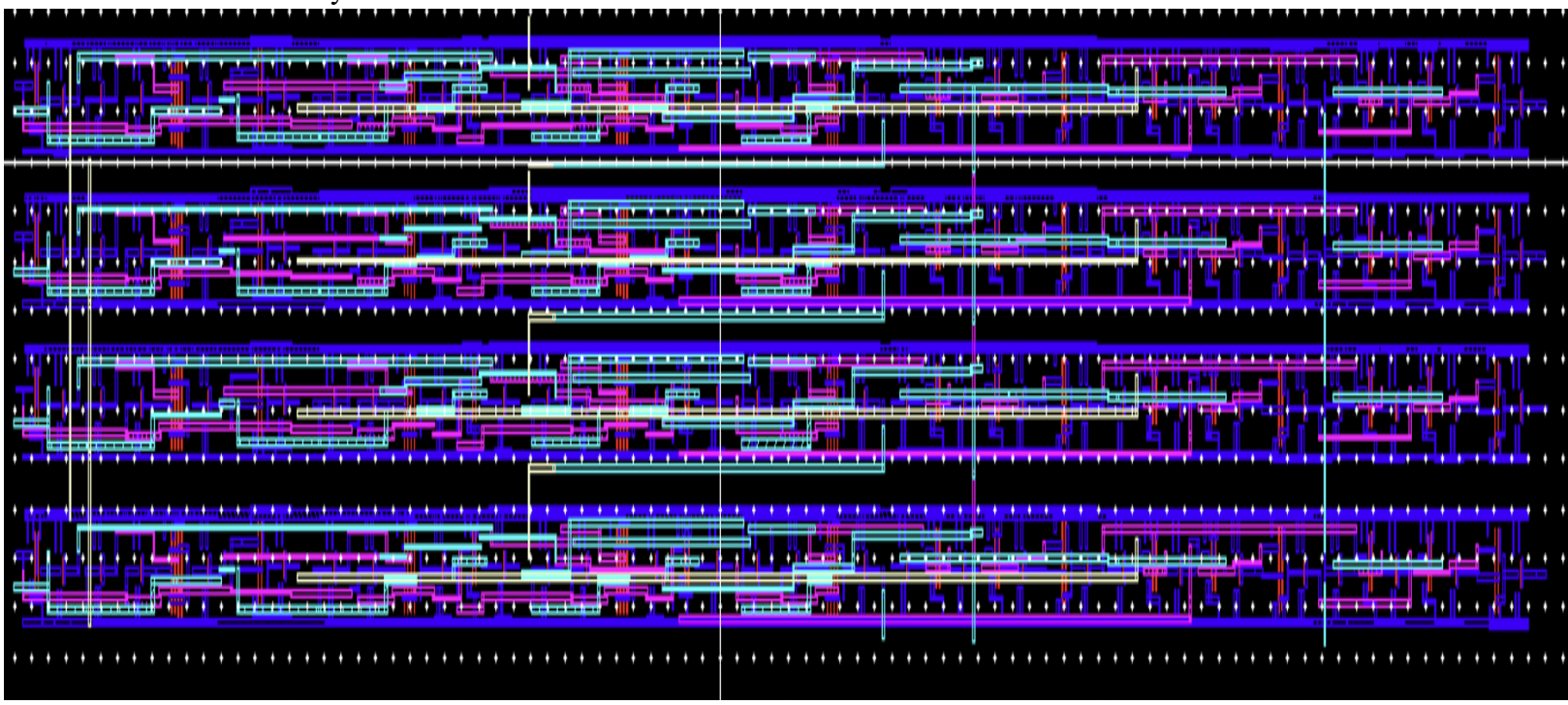

4-bit ALU DRC

Virtuoso® 6.1.8-64b - Log: /users/ugrad/vttang/CDS.log@crystalcove.eecs.uci.edu

File Tools Options Help cadence

```
executing: drc(metalcapCapEdge via3Edge (sep < (lambda * 5.0)) errMesg)
executing: saveDerived(geomAnd(metalcap via3) errMesg)
executing: drc(metalcapBottomEdge via4Edge (enc < (lambda * 5.0)) errMesg)
executing: drc(metalcapBottomEdge via3Edge (enc < (lambda * 5.0)) errMesg)
DRC started.......Sat Apr 25 14:59:00 2026
    completed ....Sat Apr 25 14:59:01 2026
    CPU TIME = 00:00:00  TOTAL TIME = 00:00:01
*********   Summary of rule violations for cell "4-bit-ALU layout"   *********
   Total errors found: 0
```

4-bit ALU LVS check

```
        count
         293            nets
         18             terminals
         280            pmos
         280            nmos

Devices in the rules but not in the netlist:
         cap nfet pfet nmos4 pmos4

4 net-list ambiguities were resolved by random selection.

The net-lists match.

                                layout  schematic
                                   instances
         un-matched             0       0
         rewired                0       0
         size errors            0       0
         pruned                 0       0
         active                 560     560
         total                  560     560

                                  nets
         un-matched             0       0
         merged                 0       0
         pruned                 0       0
         active                 293     293
         total                  293     293

                                terminals
         un-matched             0       0
         matched but
         different type         0       0
         total                  0       18


Probe files from /users/ugrad/vttang/EECS170D/Cadence6/LVS/schematic

devbad.out:

netbad.out:

mergenet.out:

termbad.out:

prunenet.out:

prunedev.out:

audit.out:


Probe files from /users/ugrad/vttang/EECS170D/Cadence6/LVS/layout

devbad.out:

netbad.out:

mergenet.out:

termbad.out:

prunenet.out:

prunedev.out:
```

32-bit ALU Schematic

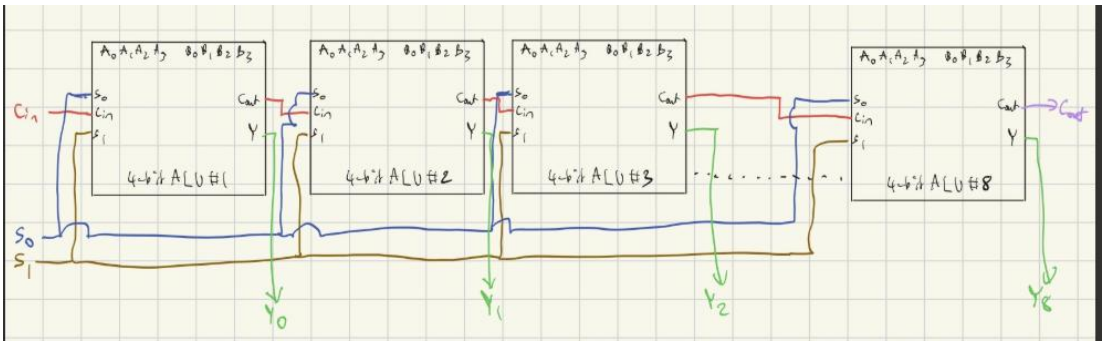

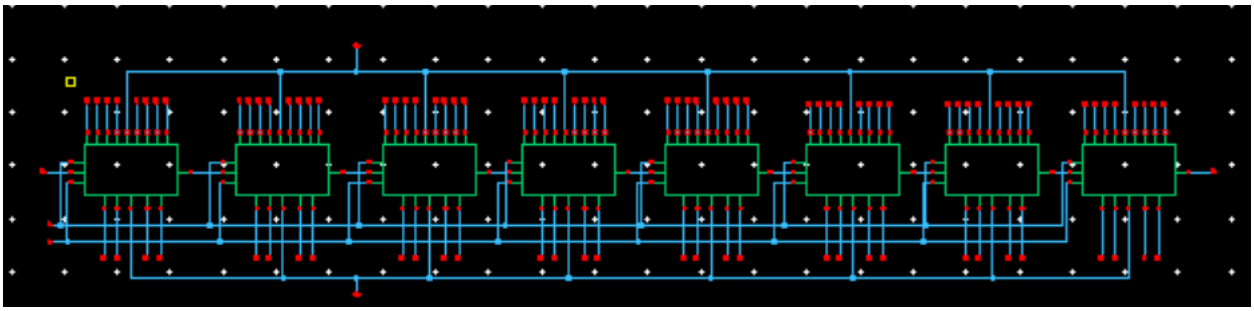

32-bit ALU Layout

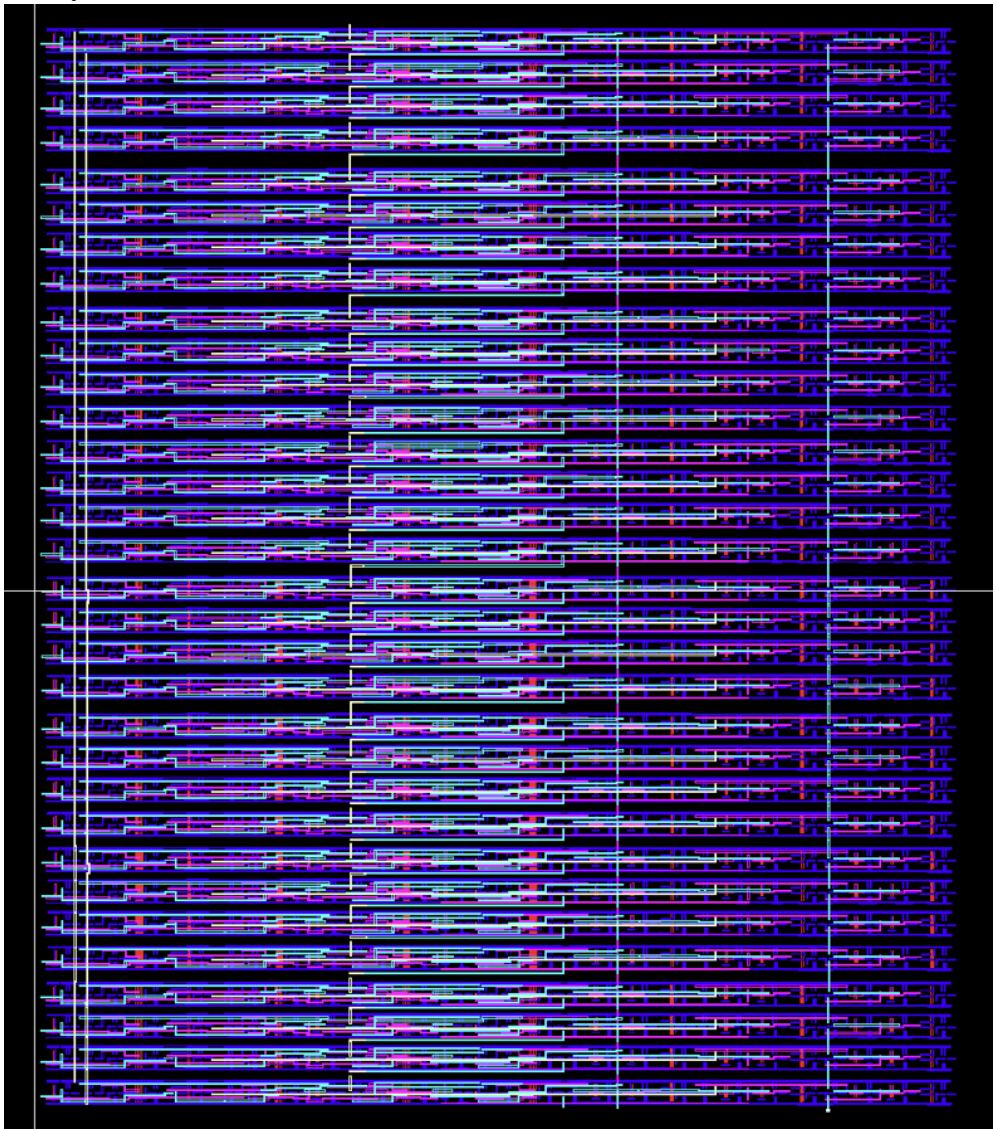

32-bit ALU DRC

Virtuoso® 6.1.8-64b - Log: /users/ugrad/vttang/CDS.log@crystalcove.eecs.uci.edu

File Tools Options Help

```
executing: drc(metalcapCapEdge via3Edge (sep < (lambda * 5.0)) errMesg)
executing: saveDerived(geomAnd(metalcap via3) errMesg)
executing: drc(metalcapBottomEdge via4Edge (enc < (lambda * 5.0)) errMesg)
executing: drc(metalcapBottomEdge via3Edge (enc < (lambda * 5.0)) errMesg)
DRC started.......Fri Apr 24 00:01:18 2026
    completed ....Fri Apr 24 00:01:24 2026
    CPU TIME = 00:00:04  TOTAL TIME = 00:00:06
*********   Summary of rule violations for cell "32-bit-ALU layout"   *********
   Total errors found: 0
```

32-bit ALU LVS check:

/users/ugrad/vttang/EECS170D/Cadence6/LVS/si.out@crystalcove.eecs.uci.edu

File Edit View Help

```
                                  nets
        un-matched              0       0
        merged                  0       0
        pruned                  0       0
        active                  2309    2309
        total                   2309    2309

                                terminals
        un-matched              0       0
        matched but
        different type          0       0
        total                   0       102


Probe files from /users/ugrad/vttang/EECS170D/Cadence6/LVS/schematic

devbad.out:

netbad.out:

mergenet.out:

termbad.out:

prunenet.out:

prunedev.out:

audit.out:


Probe files from /users/ugrad/vttang/EECS170D/Cadence6/LVS/layout

devbad.out:

netbad.out:

mergenet.out:

termbad.out:

prunenet.out:

prunedev.out:
```

Close

L1 C1

Conclusion

In conclusion, in this project, I was able to create a 32-bit ALU and ran DRC/LVS successfully. Through a series of building blocks such as a 2:1 multiplexer, 4:1 multiplexer, 1-bit-ALU, and 4-bit ALU, I was able to create a 32-bit ALU and performed its layout successfully. To verify that the ALU was executing its computation normally, transient response was run to plot the waveforms and analyze if the ALU behaves as expected according to the truth table in the theory section. However, to improve this project, the layout of the AND, XOR, NAND gates can be made smaller for space efficiency when creating multiplexers and ALUs.

Appendix

How to run DRC and LVS check

For DRC:

In the rules file enter: /users/ugrad/vttang/EECS170D/ncsu-cdk-1.6.0/techfile/divaDRC.rul and uncheck _TechLib_tsmc03d

For LVS:

Get extracted file first:

- Verify → enter rule file as /users/ugrad/vttang/EECS170D/ncsu-cdk-1.6.0/techfile/divaEXT.rul
- Make sure schematic matches extracted:

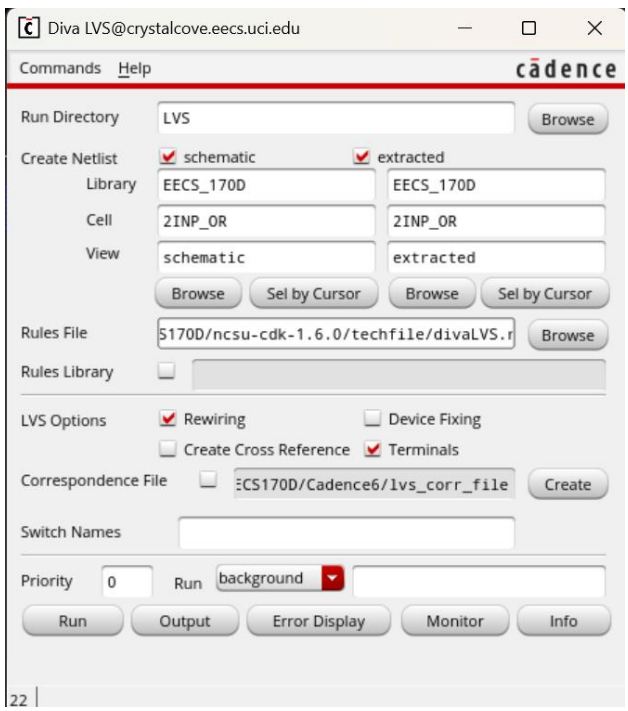

- Enter the same rules file except change the end to divaLVS.rul

Grid display original settings:

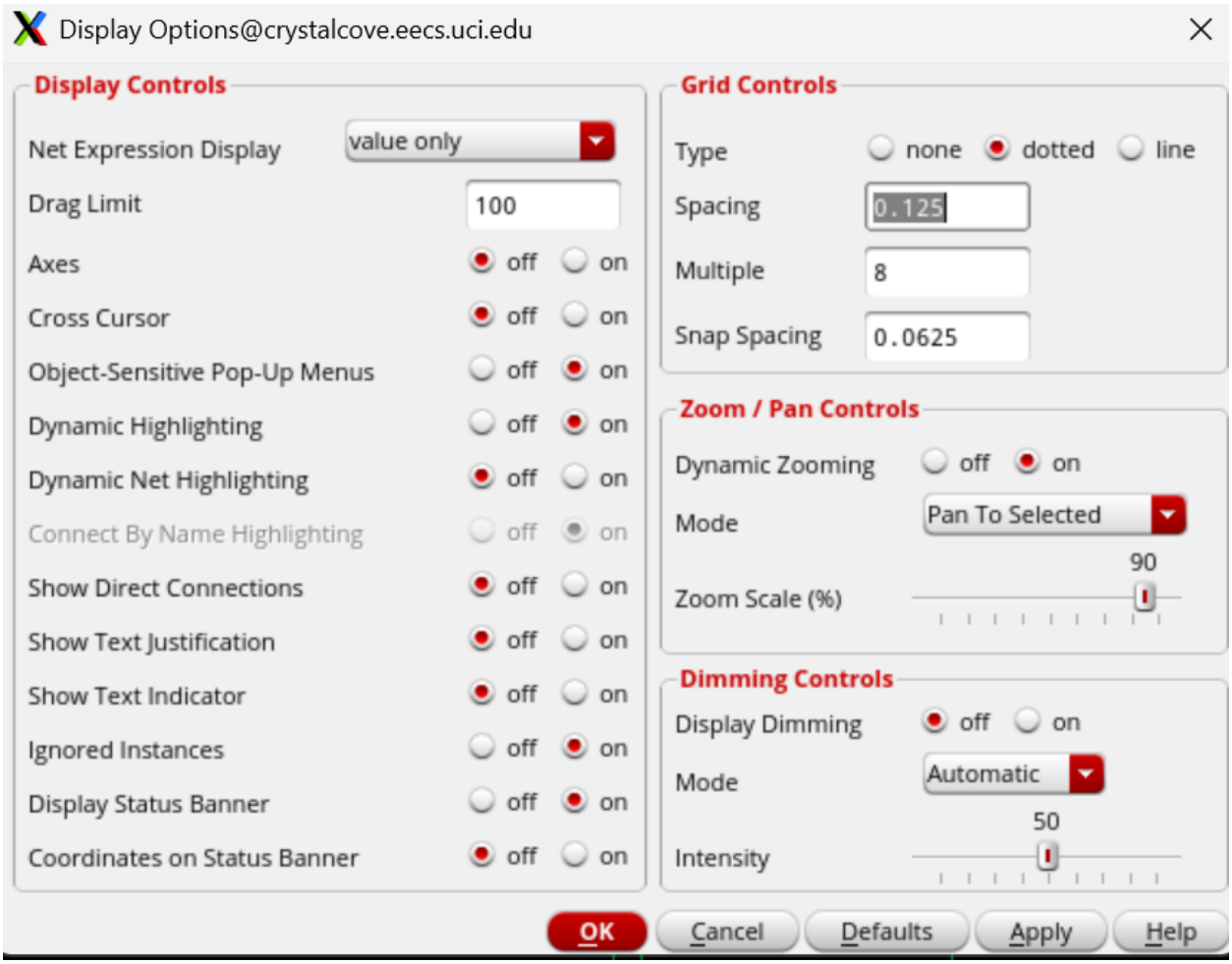
Display Options@crystalcove.eecs.uci.edu
Display Controls
Net Expression Display
value only
Drag Limit
100
Axes
off
on
Cross Cursor
off
on
Object-Sensitive Pop-Up Menus
off
on
Dynamic Highlighting
off
on
Dynamic Net Highlighting
off
on
Connect By Name Highlighting
off
on
Show Direct Connections
off
on
Show Text Justification
off
on
Show Text Indicator
off
on
Ignored Instances
off
on
Display Status Banner
off
on
Coordinates on Status Banner
off
on
Grid Controls
Type
none
dotted
line
Spacing
0.125
Multiple
8
Snap Spacing
0.0625
Zoom / Pan Controls
Dynamic Zooming
off
on
Mode
Pan To Selected
90
Zoom Scale (%)
Dimming Controls
Display Dimming
off
on
Mode
Automatic
50
Intensity
OK
Cancel
Defaults
Apply
Help